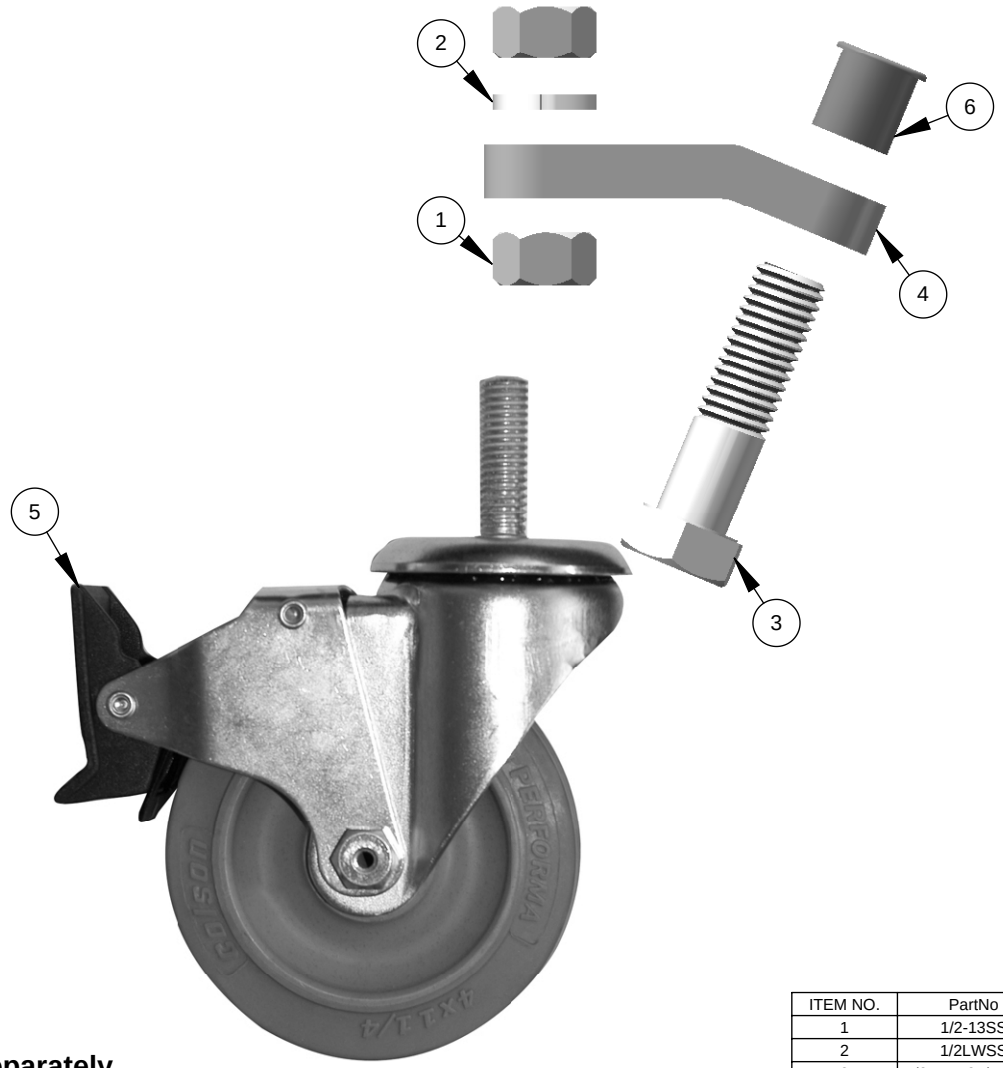

ITEM NO.	PartNo	DESCRIPTION	QTY
1	1/2-13SS	NUT,STAINLESS,1/2-13	6
2	1/2LWSS	WASHER,MEDSPLITLOCK,1/2X.859X.13,SS	3
3	5/8X11X21/4HHSS	BOLT,HEX HD,5/8-11X2-1/4,SS	3
4	90557-001	ADAPTER,CASTER,TRI-MAX	3
5	D12240	CASTER,TRIMAX WHEEL KIT	3
6	E-5/8	CAP,STANDARD THREAD,PLASTIC	3

***NOTE**
Components may be sold separately.
Please see sub-assembly part number drawing for details.

90557-050	**TRI-MAX WHEEL KIT**	**DATE:** 6/20/2011	SECO www.surveying.com 4155 OASIS ROAD REDDING, CA 96003
		REV. A PAGE 1 OF 1	