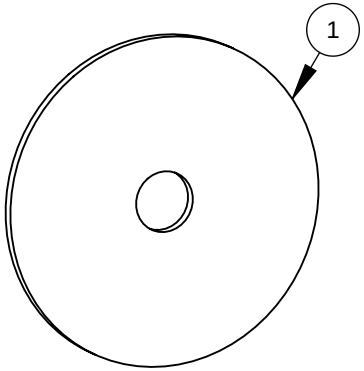

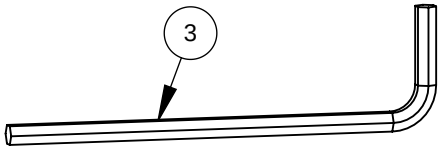

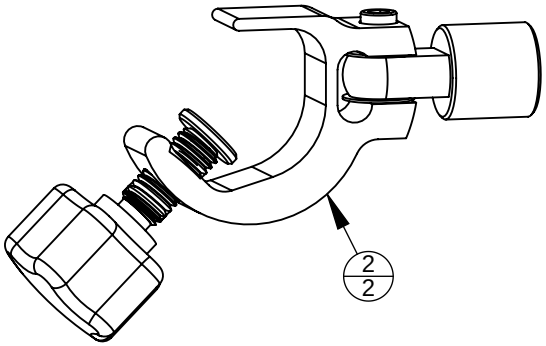

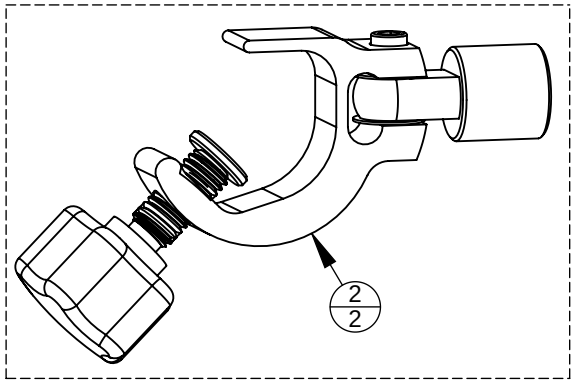

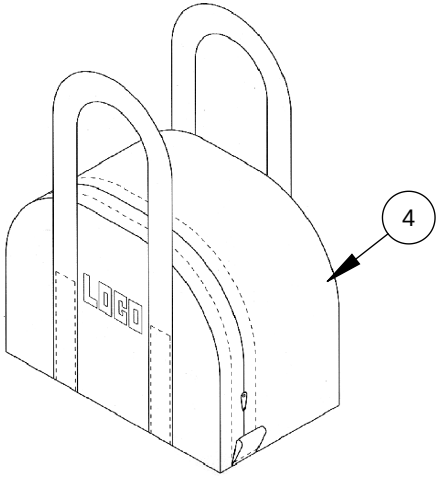

***NOTE**
Components may be sold separately.
Please see sub-assembly part number drawing for details.

ITEM NO.	PartNo	DESCRIPTION	QTY
1	5182-002	PLATE,ADAPTER,ANTENNA,GPS	1
2	5198-158	BRACKET,POLE,OFFSET HOLDER	2
3	5MM-ALLEN	WRENCH,HEX,5MM,RIGHT ANGLE	1
4	8070-00-ORG	BAG,PRISM,SINGLE	1
5	DOC-5198-157	IS: OFFSET POLE HOLDER KIT	1

5198-157	**HOLDER KIT,OFFSET POLE**	**DATE:** 2/17/2006 **REV.** B PAGE 1 OF 1	MANUFACTURING CO., INC. 4155 OASIS ROAD, REDDING, CA 96003