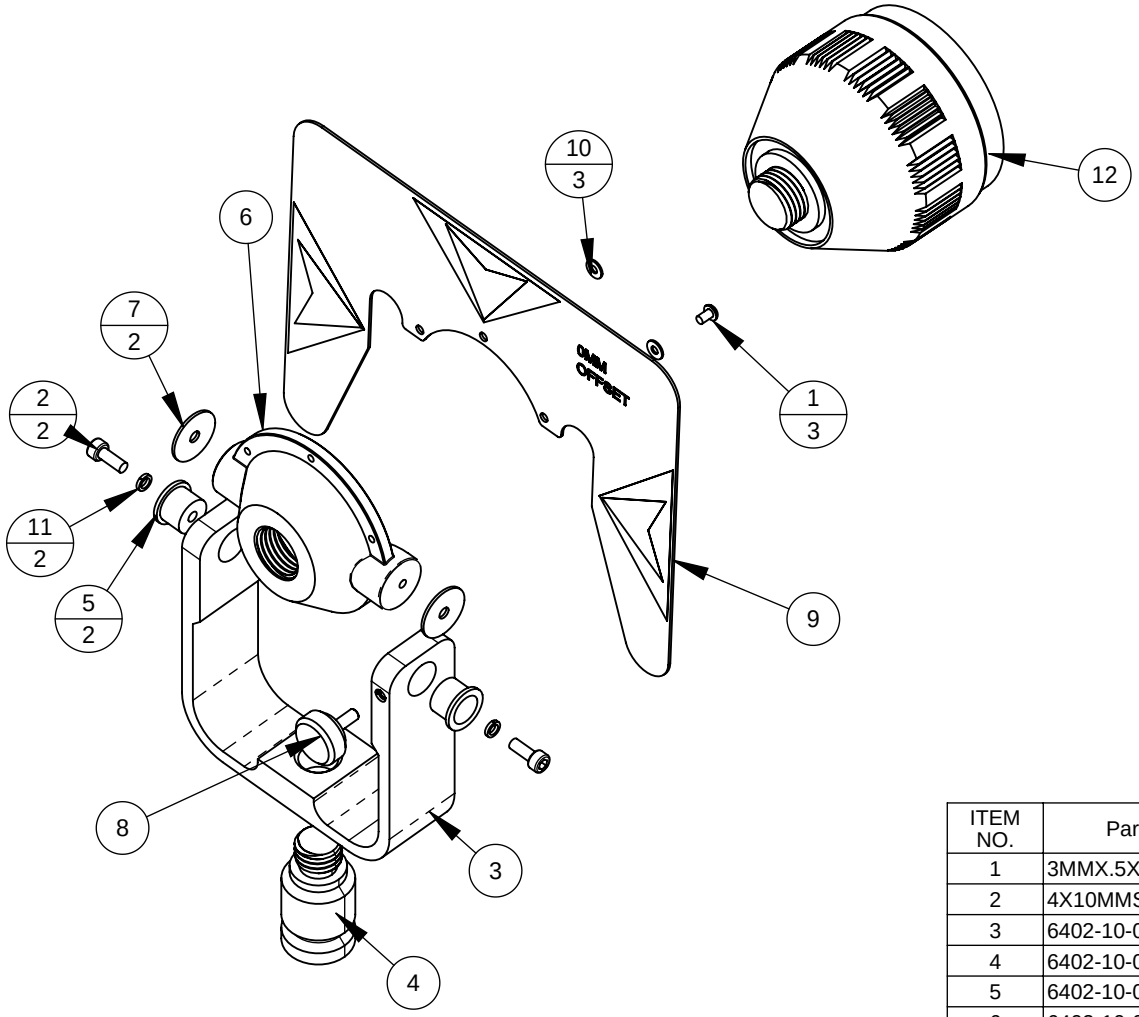

INK	PAINT	-XXX
BLACK	YELLOW	YLB
BLACK	FLO YELLOW	FLB
BLACK	FLO ORANGE	FOB

ITEM NO.	PartNo	DESCRIPTION	QTY
1	3MMX.5X6BHP	SCREW,BUTTON HEAD,3MM X .5 X6MM LONG,PHILLIPS,SS	3
2	4X10MMSHSS	SCREW,SOCKET CAP,SS,4MMX10MM	2
3	6402-10-001	YOKE,PRISM SYSTEM,62MM	1
4	6402-10-002	MOUNT,BASE,PRISM,SYSTEM,62MM	1
5	6402-10-003	BUSHING,PRISM SYSTEM,62MM	2
6	6402-10-004	MOUNT,TARGET,PRISM SYSTEM,62MM	1
7	6402-10-005	WASHER,NYLON.760X.171X.040,NATURAL	2
8	6402-10-006	KNOB,LOCK	1
9	6402-10-007-XXX	TARGET,PRISM SYSTEM,62MM,0/-30	1
10	6402-10-008	WASHER,SS,3MMX7MMX.64MM	3
11	6402-10-009	WASHER,LOCK,4MMX6MMX1.2MM	2
12	6411-02-BLK	PRISM,62MM,W/CANISTER,COPPER	1

***NOTE**
Components may be sold separately.
Please see sub-assembly part number drawing for details.

6402-10-XXX | **PRISM SYSTEM,62MM,0/-30**

DATE: 8/5/2003
REV. A | PAGE 1 OF 1

MANUFACTURING CO., INC.
4155 OASIS ROAD, REDDING, CA 96003